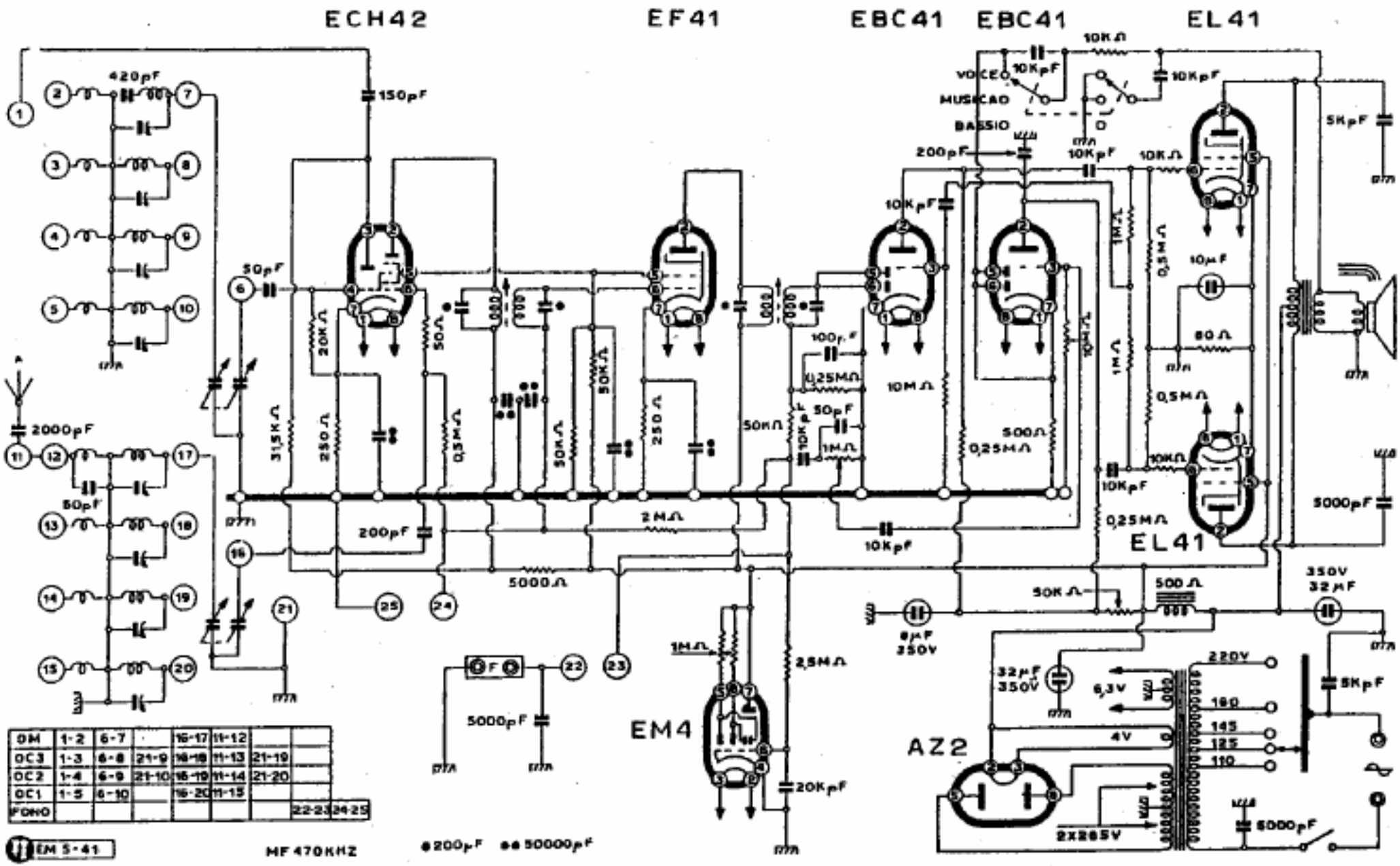

OM	1-2	6-7		16-17	11-12		
OC3	1-3	6-8	21-9	16-18	11-13	21-19	
OC2	1-4	6-9	21-10	16-19	11-14	21-20	
OC1	1-5	6-10		16-20	11-15		
FONO							22-23 24-25

CARISH - Mod. RC 8